EVAL-M3-102T01
EVAL-M3-102T01.SchDoc

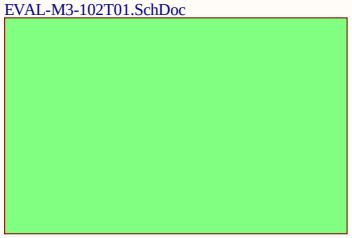

EVAL-M3-102T02
EVAL-M3-102T02.SchDoc

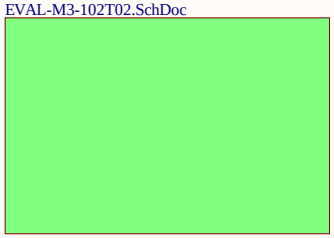

EVAL-M3-102T03
EVAL-M3-102T03.SchDoc

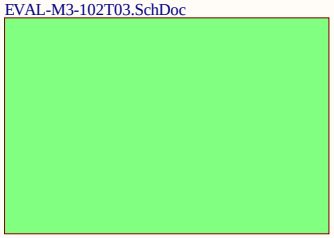

*Legal Disclaimer*
*The information given in this document shall in no event be regarded as a guarantee of conditions or characteristics. With respect to any examples or hints given herein, any typical values stated herein and/or any information regarding the application of the device,Infineon Technologies hereby disclaims any and all warranties and liabilities of and kind, including without limitation, warranties of non-infringement of intellectual property rights of any third party.*

| | | |
|---|---|---|
| Model Name: EVAL-M3-102T | | |
| Approved: Zhonglin Liu | | Revision:V1.0 |
| Date: 7/16/2020 | Time: 10:26:01 AM | Sheet 00 of 03 |

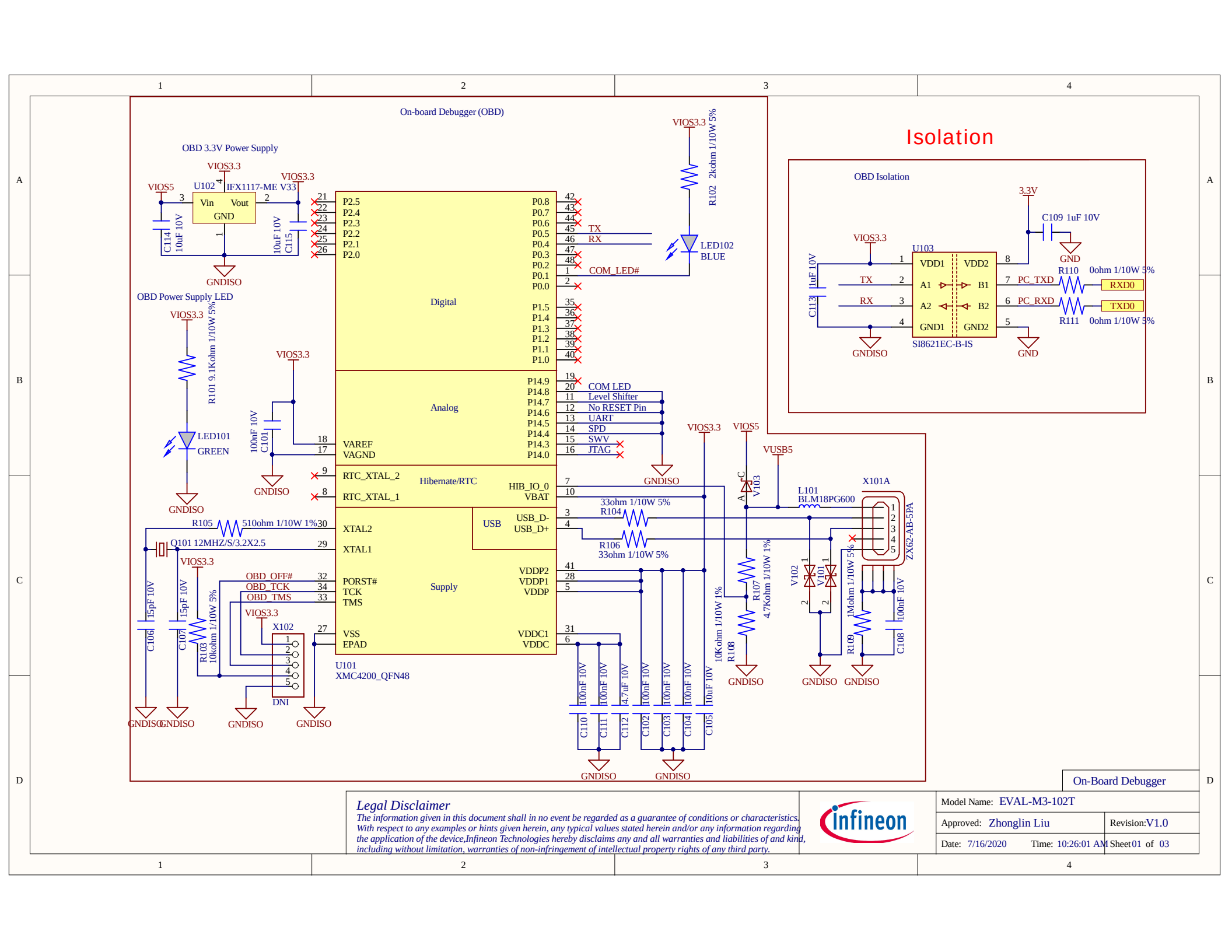


## Legal Disclaimer

*The information given in this document shall in no event be regarded as a guarantee of conditions or characteristics. With respect to any examples or hints given herein, any typical values stated herein and/or any information regarding the application of the device,Infineon Technologies hereby disclaims any and all warranties and liabilities of and kind, including without limitation, warranties of non-infringement of intellectual property rights of any third party.*

| | |
|---|---|
| Model Name: | EVAL-M3-102T |
| Approved: | Zhonglin Liu |
| Revision: | V1.0 |
| Date: | 7/16/2020 |
| Time: | 10:26:01 AM |
| Sheet | 01 of 03 |

On-Board Debugger

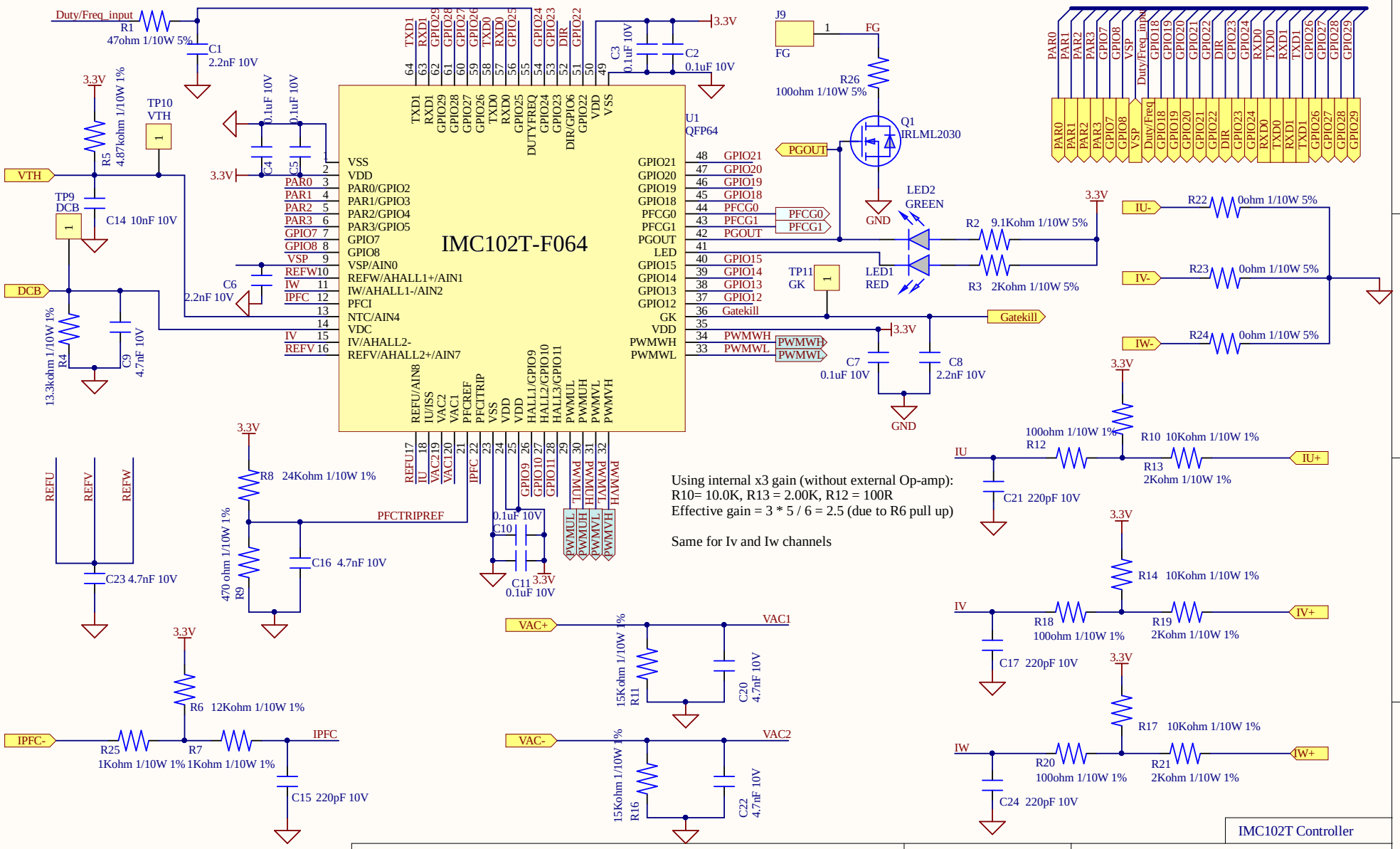


*Legal Disclaimer*

*The information given in this document shall in no event be regarded as a guarantee of conditions or characteristics. With respect to any examples or hints given herein, any typical values stated herein and/or any information regarding the application of the device,Infineon Technologies hereby disclaims any and all warranties and liabilities of and kind, including without limitation, warranties of non-infringement of intellectual property rights of any third party.*

IMC102T Controller

| | | |
|---|---|---|
| Model Name: EVAL-M3-102T | | |
| Approved: Zhonglin Liu | | Revision:V1.0 |
| Date: 7/16/2020 | Time: 10:26:01 AM | Sheet 02 of 03 |

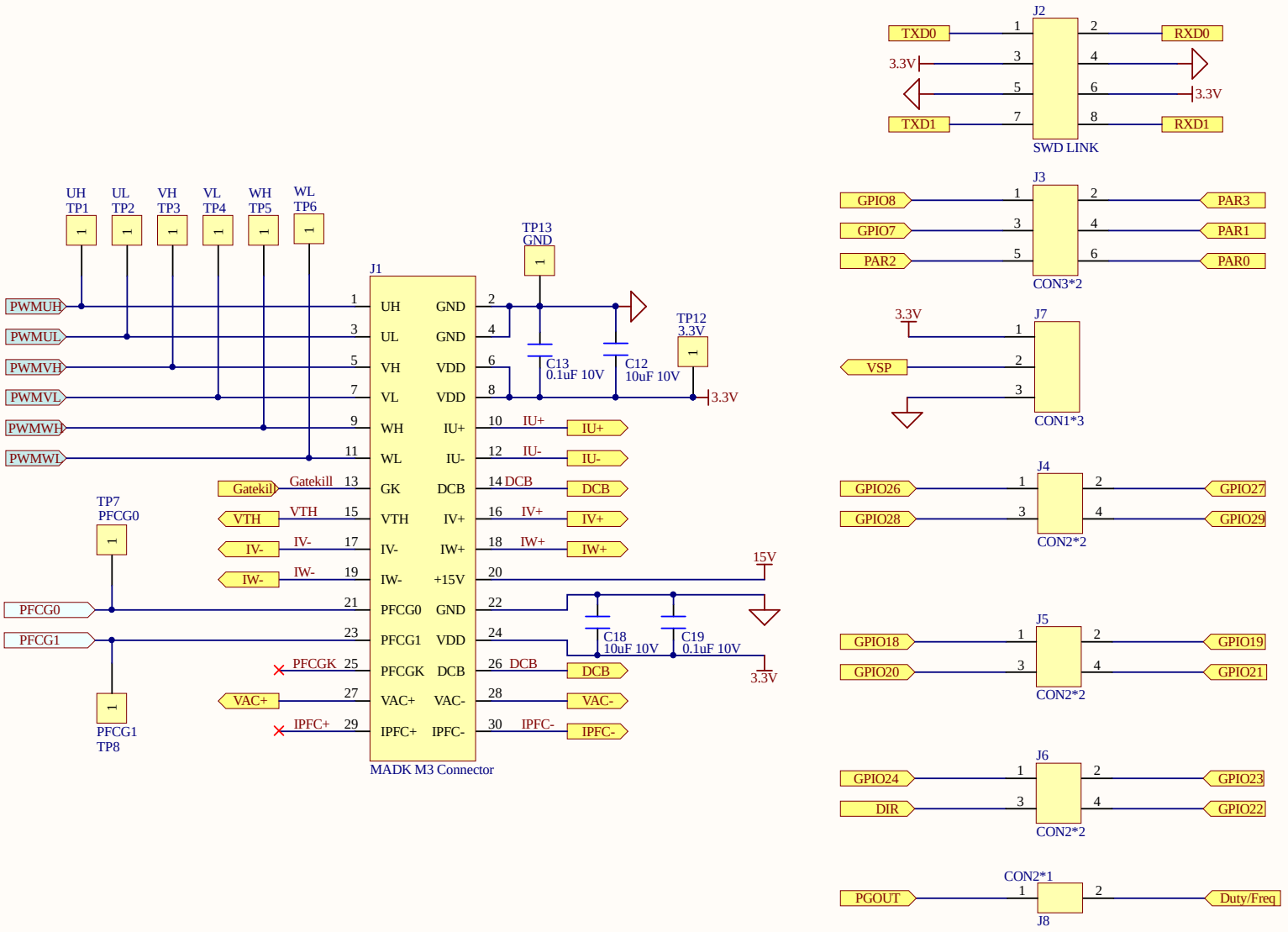


MADK CON & TEST Point

*Legal Disclaimer*

*The information given in this document shall in no event be regarded as a guarantee of conditions or characteristics. With respect to any examples or hints given herein, any typical values stated herein and/or any information regarding the application of the device,Infineon Technologies hereby disclaims any and all warranties and liabilities of and kind, including without limitation, warranties of non-infringement of intellectual property rights of any third party.*

| | | |
|---|---|---|
| Model Name: EVAL-M3-102T | | |
| Approved: Zhonglin Liu | | Revision:V1.0 |
| Date: 7/16/2020 | Time: 10:26:01 AM | Sheet 03 of 03 |

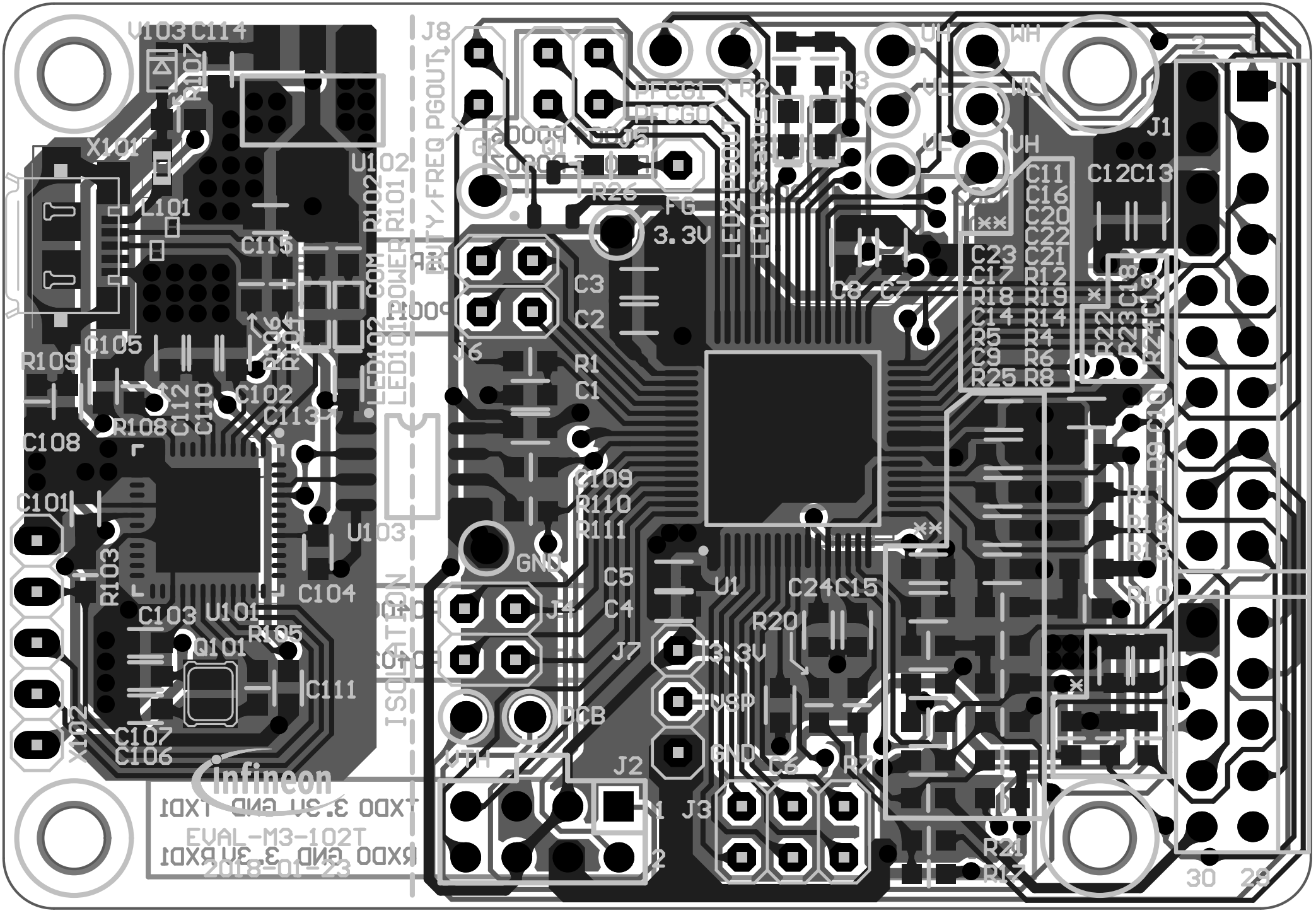

V103 C114
R107
X101
L101
C115
U102
R102
R101
COM
POWER
LED102
LED101
J8
PGOUT
DUTY/FREQ
PFCG1
PFCG0
R2
R3
UH
WH
VL
WL
VH
J1
C11
C16
C20
C22
C23
C21
C17
R12
R18
R19
C14
R14
R5
R4
C9
R6
R25
R8
C12C13
R26
FG
3.3V
C3
C2
C8
C7
R109
C105
R106
R104
C102
C112
C110
C113
R108
C108
J6
R1
C1
C109
R110
R111
C101
U103
R103
GND
C5
C4
U1
C24C15
R20
R11
R16
R18
R10
C104
C103
U101
R105
Q101
J4
J7
3.3V
VSP
C111
DCB
C107
C106
X102
VTH
J2
GND
C6
R7
J3
R21
R17
ISOLATION
Infineon
EVAL-M3-102T
2018-01-23
30
29

| Comment | Description | Designator | Footprint | LibRef | Quantity |
|---|---|---|---|---|---|
| TP12 | Connector | 3.3V | TP | CON1 | |
| 2.2nF 10V | CAP SMD 2.2nF 10V | C1, C6, C8 | C0603 | C0603 | |
| 0.1uF 10V | CAP SMD 0.1uF 10V | C2, C3, C4, C5, C7, | C0603 | C0603 | |
| 4.7nF 10V | CAP SMD 4.7nF 10V | C9, C16, C20, C22, C | C0603 | C0603 | |
| 10uF 10V | CAP SMD 10uF 10V | C12, C18, C105, C11 | C0603 | C0603 | |
| 10nF 10V | CAP SMD 10nF 10V | C14 | C0603 | C0603 | |
| 220pF 10V | CAP SMD 220pF 10V | C15, C17, C21, C24 | C0603 | C0603 | |
| 100nF 10V | CAP SMD 100nF 10V | C101, C102, C103, C | C0603 | C0603 | |
| 15pF 10V | CAP SMD 15F 10V 0 | C106, C107 | C0603 | C0603 | |
| 1uF 10V | CAP SMD 1uF 10V 0 | C109, C113 | C0603 | C0603 | |
| 4.7uF 10V | CAP SMD 4.7F 10V ( | C112 | C0603 | C0603 | |
| TP9 | Connector | DCB | TP | CON1 | |
| TP11 | Connector | GK | TP | CON1 | |
| TP13 | Connector | GND | TP | CON1 | |
| MADK M3 Connector | MADK 30PIN CONNE | J1 | CON-MADK-2*15-2. | MADK-30PIN-CONNE | |
| SWD LINK | CON4*2 | J2 | CON-SWD-Link-2*4 | CON4*2 | |
| CON3*2 | CON3*2 | J3 | CON2*3 | CON3*2 | |
| CON2*2 | CON2*2 | J4, J5, J6 | CON2*2 | CON2*2 | |
| CON1*3 | CON1*3 | J7 | CON1*3 | CON1*3 | |
| CON2*1 | CON2*1 | J8 | CON2*1 | CON2*1 | |
| FG | CON1*1 | J9 | CON1*1 | CON1*1 | |
| BLM18PG600 | BLM18PG600 | L101 | L1608 | Ferrite Bead | |
| RED | LED RED 0603 | LED1 | LED0603 | LED2 | |
| GREEN | LED GREEN 0603, LE | LED2, LED101 | LED0603 | LED1 | |
| BLUE | LED BLUE 0603 | LED102 | LED0603 | LED1 | |
| TP7 | Connector | PFCG0 | TP | CON1 | |
| TP8 | Connector | PFCG1 | TP | CON1 | |
| IRLML2030 | HEXFET 30V 1.5A 2 | Q1 | SOT23 | NMOS | |
| 12MHZ/S/3.2X2.5 | | Q101 | 32x25_2PAD | NX3225_22PAD | |
| 47ohm 1/10W 5% | RES SMD 1/10W 47o | R1 | R0603 | RES0603 | |
| 9.1Kohm 1/10W 5% | RES SMD 1/10W 9.1 | R2, R101 | R0603 | RES0603 | |
| 2Kohm 1/10W 5% | RES SMD 1/10W 2Ko | R3, R102 | R0603 | RES0603 | |
| 13.3kohm 1/10W 1% | RES SMD 1/10W 13. | R4 | R0603 | RES0603 | |
| 4.87kohm 1/10W 1% | RES SMD 1/10W 4.8 | R5 | R0603 | RES0603 | |
| 12Kohm 1/10W 1% | RES SMD 1/10W 12k | R6 | R0603 | RES0603 | |
| 1Kohm 1/10W 1% | RES SMD 1/10W 1Ko | R7, R25 | R0603 | RES0603 | |
| 24Kohm 1/10W 1% | RES SMD 1/10W 24k | R8 | R0603 | RES0603 | |
| 470 ohm 1/10W 1% | RES SMD 1/10W 470 | R9 | R0603 | RES0603 | |
| 10Kohm 1/10W 1% | RES SMD 1/10W 10k | R10, R14, R17, R108 | R0603 | RES0603 | |
| 15Kohm 1/10W 1% | RES SMD 1/10W 15k | R11, R16 | R0603 | RES0603 | |
| 100ohm 1/10W 1% | RES SMD 1/10W 100 | R12, R18, R20 | R0603 | RES0603 | |
| 2Kohm 1/10W 1% | RES SMD 1/10W 2Ko | R13, R19, R21 | R0603 | RES0603 | |
| 0ohm 1/10W 5% | RES SMD 0ohm 1/10 | R22, R23, R24, R110 | R0603 | RES0603 | |
| 100ohm 1/10W 5% | RES SMD100ohm 1/ | R26 | R0603 | RES0603 | |
| 10kohm 1/10W 5% | RES SMD 1/10W 10k | R103 | R0603 | RES0603 | |
| 33ohm 1/10W 5% | RES SMD 1/10W 33o | R104, R106 | R0603 | RES0603 | |
| 510ohm 1/10W 1% | RES SMD 1/10W 510 | R105 | R0603 | RES0603 | |
| 4.7Kohm 1/10W 1% | RES SMD 1/10W 4.7 | R107 | R0603 | RES0603 | |
| 1Mohm 1/10W 5% | RES SMD 1/10W 1M | R109 | R0603 | RES0603 | |
| QFP64 | IMC102T QFP64 | U1 | | IMC102T | |
| XMC4200_QFN48 | XMC4200_QFN48 | U101 | INF-PG-VQFN-48-5 | XMC4200_QFN48 | |
| IFX1117-ME V33 | IFX1117-ME V33 | U102 | SOT-223 | IFX1117-ME V33 | |
| SI8621EC-B-IS | SI8621EC-B-IS | U103 | SO-8 | SI8621 | |
| TP1 | Connector | UH | TP | CON1 | |
| TP2 | Connector | UL | TP | CON1 | |
| ESD237-B1-W0201 | ESD237-B1-W0201 | V101, V102 | SG-WLL-2-1 | ESD8V0L2B-03L | |
| BAS3010A-03W | BAS3010A-03W | V103 | SOD323-R | BAT60 | |
| TP3 | Connector | VH | TP | CON1 | |